USER MANUAL

Electric Scissor Lift Bed



Bed platform reference: 10.CM.6067 and variants

Scissor lift trolley reference: 10.CM.6068 and variants

Read this manual before installing or using the bed. Keep it available throughout the service life of the product.

Product information and contacts

This manual contains the instructions required for the use of the electric scissor lift bed comprising bed platform reference 10.CM.6067 and its variants, together with scissor lift trolley reference 10.CM.6068 and its variants. Read all instructions before use.

Distributor

HappyLife - Prod.Ortoped.e Cirurg.,Unip., Lda (Loja Ortopédica)
Physical store
Av. Nossa Senhora de Fátima, 28, Loja B, 2410-140, Leiria
Online store
R. Dr. Arnaldo Cardoso e Cunha, 36, R/C Esquerdo, 2410-270, Leiria
T: (+351) 244 233 085 | E: info@lojaortopedica.pt

Manufacturer

JMS - Indústria de Mobiliário Hospitalar, S.A.
Rua Zona Industrial do Bunheiro, 26
3870-021 Murtosa - Portugal
T: (+351) 234 880 018 | E: jms@jmshospitalar.com

Technical assistance

Contact the authorised distributor.

IMPORTANT	On delivery, check that the bed is complete and that no damage has occurred during transport. Report any fault or damage to the supplier in writing.

Contents

Product information and contacts 2

1. General information 4

2. Compliance and delivery conditions 5

3. Safety and risks 6

4. Product description and correct use 7

5. Available models 8

6. Main components 9

7. Technical specifications and dimensions 10

8. Electrical parameters and emergency battery 11

9. Installation and assembly 12

10. Lift motor installation 13

11. Headboards and mattress support brackets 14

12. Installation and commissioning 15

13. Handset operation 16

14. Maintenance 17

15. Cleaning and disinfection 18

16. Storage, packaging and recycling 19

1. General information

Information labels used in this manual

WARNING	Indicates a possible risk which, if the procedure or condition is not followed correctly, may lead to death, bodily injury or other serious consequences.
CAUTION	Indicates a possible risk which, if the procedure or condition is not followed correctly, may cause damage to or failure of the equipment.
IMPORTANT	Explains or reinforces a procedure or condition.

Key product-label meanings

Marking / term	Meaning
Warning	Attention / hazard
Crushing or compression hazard	Keep clear of moving and closing parts
CE	CE marking
SWL	Safe working load
Manufacturer	Manufacturer identification
MD	Medical device
LOT	Manufacturing lot
SN	Serial number
REF	Article reference
Do not dispose with household waste	Use the appropriate waste stream
Indoor use	Use in indoor environments
Read user manual	Read the instructions before use

2. Compliance and delivery conditions

The device complies with Regulation (EU) 2017/745 of the European Parliament and of the Council of 5 April 2017 and with the applicable provisions of the harmonised standards listed below.

Standard	Subject
EN ISO 14971:2019	Medical devices - application of risk management to medical devices
EN ISO 15223-1:2021	Graphical symbols for labelling medical devices
EN ISO 20417:2021	Medical devices - information supplied by the manufacturer
EN 60601-1:2006	Medical electrical equipment - Part 1: general requirements for basic safety and essential performance
EN 60601-1-2:2015	Medical electrical equipment - Part 1-2: electromagnetic disturbances - requirements and tests
EN 60601-1-6:2010	Medical electrical equipment - Part 1-6: usability
EN 60601-2-52:2015	Medical electrical equipment - Part 2-52: particular requirements for medical beds

The device is classified as a **Class I medical device**. The source manual also states that manufacturing procedures comply with NP EN ISO 9001:2015 and NP EN ISO 13485.

Delivery condition

The bed is supplied fully assembled except for the lift motor, castors and mattress support brackets. All components must be installed before use.

When transporting or repositioning the bed, unlock the castors. The castors are intended for smooth, clean indoor floors such as ceramic, linoleum, wood or similar surfaces; rough, irregular or dirty floors may damage them.

3. Safety and risks

WARNING	Read the user manual carefully before using the bed. Clean and disinfect the bed before first use. Follow all operating and movement instructions.

Safe operation

- Use the bed only for its intended purpose and only when it is in perfect working condition.
- The bed should only be handled by people whose knowledge or practical experience enables correct use.
- Use is limited to adult patients.
- If the patient’s medical condition permits, ensure the patient has been informed about operation of the bed and the applicable safety instructions.
- Use the bed indoors only and move it only on level, compact surfaces.
- The patient should sit or lie on the bed only with the articulating sections in the horizontal position, to avoid damaging the articulations and motor.
- Do not use the bed if faults or abnormalities are detected that could injure users or patients.
- Adjust bed height and inclination to the patient’s build, condition and clinical status.
- During movement of bed sections, monitor the patient and surroundings to avoid crushing or trapping.
- During height adjustment, check fixed accessories so they are not damaged.
- Before moving the bed, disconnect the mains cable and secure it in a safe position to prevent damage.

Special hazards

- A damaged mains cable presents a risk of electric shock.
- Although the bed materials are heat-resistant, keep the bed away from high temperatures, flammable products and ignition sources.
- Keep the castors locked at all times except when moving the bed, whether occupied or unoccupied.
- Never exceed the maximum load specified by the manufacturer.

4. Product description and correct use

The bed is intended to provide comfort and quality of life during rest, helping users enter and leave the bed and supporting carers in their tasks. It is intended to support the patient for monitoring, treatment or alleviation of disease, injury or disability.

IMPORTANT All bed handling must follow this manual. Any action that is incompatible with the instructions or the intended use is the responsibility of the user.

Patient conditions

Requirement	Value
Maximum patient weight	135 kg
Minimum patient weight	40 kg
Minimum patient height	146 cm
Minimum body mass index (BMI)	17
Maximum total load (patient + mattress + accessories)	170 kg SWL

Permitted users and environment

- Qualified medical team.
- Any individual familiar with the user manual.
- Patients, when their medical condition permits.
- Application environments 3 and 4 in accordance with IEC 60601-2-52:2009/Cor 1:2010 AMD1:2015-03.

Incorrect use

- Any use not described in this user manual.

Operating environment

Parameter	Permitted range
Temperature	+10 °C to +40 °C
Relative humidity	30% to 75%
Atmospheric pressure	700 hPa to 1060 hPa

WARNING Do not use the bed where there is a risk of explosion or in the presence of flammable products. Electrical installations must comply with local electrical-safety requirements. If electrical instability is suspected, unplug the bed from the socket.

5. Available models

Scissor lift trolley variants

Reference	Bed platform size	Castors / braking
10.CM.6068	1900 x 900 mm	Plastic Ø100 mm
10.CM.6068.L	1900 x 1050 mm	Plastic Ø100 mm
10.CM.6068.E	2000 x 900 mm	Plastic Ø100 mm
10.CM.6068.M	1900 x 900 mm	Metal Ø100 mm
10.CM.6068.I	1900 x 900 mm	Twin-wheel Ø150 mm + central brake

Bed platform variants

Reference	Size	Corner code	Lying surface
10.CM.6067	1900 x 900 mm	RET	Beech slats
10.CM.6067.L	1900 x 1050 mm	RET	Beech slats
10.CM.6067.E	2000 x 900 mm	RET	Beech slats
10.CM.6067.J	1900 x 900 mm	RED	Beech slats
10.CM.6067.N	1900 x 900 mm	RET	HPL

Headboards and footboards

Several headboard and footboard models can be fitted to the available bed platforms. Contact the distributor for compatible models.

6. Main components



Main components of the electric scissor lift bed.

No.	Component	No.	Component
1	Headboard / footboard	6	Foot section
2	Bed platform Ref. 10.CM.6067	7	Lift trolley Ref. 10.CM.6068
3	Backrest section	8	Castors
4	Fixed section	9	Bed platform motor
5	Leg section	10	Lift trolley motor

Materials

- Structure comprising the bed platform support and trolley with lifting system, mainly manufactured from epoxy-painted steel.
- Standard colour: grey structure.

7. Technical specifications and dimensions

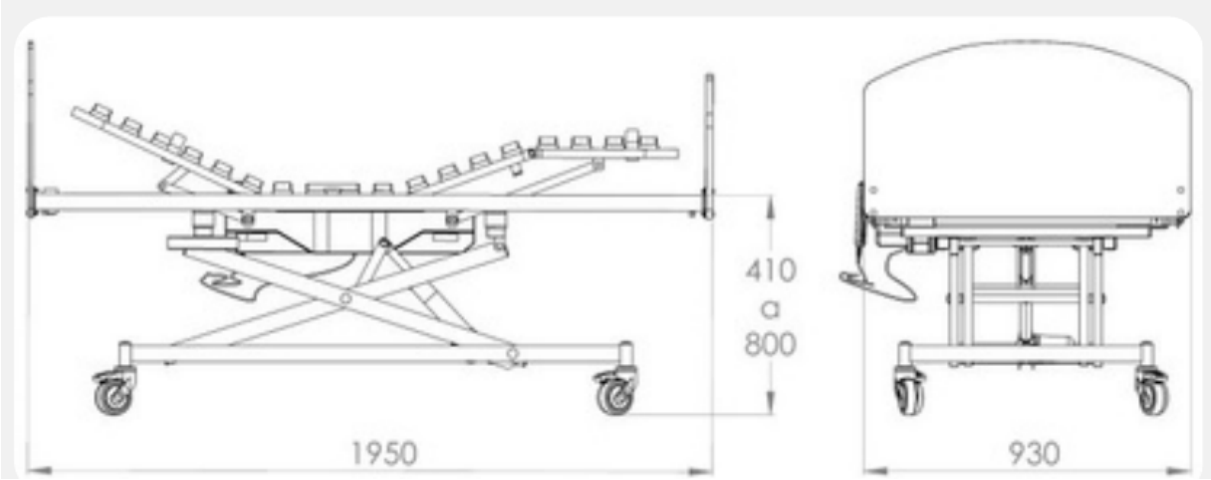

General dimensions shown in the manufacturer diagram.

Specification	Value
Overall dimensions shown in diagram	1950 mm length x 930 mm width
Bed platform length	1900 mm
Bed platform width	900 mm
Lying surface width	790 mm
Bed platform height adjustment	410 - 800 mm
Backrest section angle	0° - 70°
Thigh section angle	0° - 15°
Maximum bed weight without headboards	46 kg
Maximum patient weight	135 kg
Safe working load (SWL)	170 kg

Bed platform section dimensions

Section	Dimensions
Backrest	595 x 790 mm
Fixed	400 x 790 mm
Legs	390 x 790 mm
Feet	415 x 790 mm

8. Electrical parameters and emergency battery

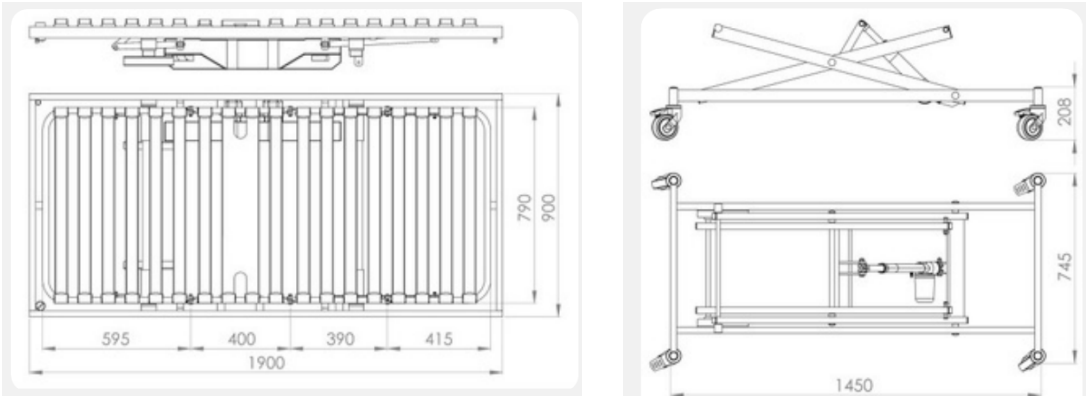

Bed platform and scissor lift trolley reference drawings.

Parameter	Bed platform	Lift trolley
Power supply	230 V, +/-10%, 50-60 Hz	230 V, +/-10%, 50-60 Hz
Operating voltage	24 V DC	24 V DC
Protection against water and dust	IPX4	IPX4
Noise level	≤65 dB	≤65 dB
Motor duty cycle	15%, max. 2 min / 12 min	15%, max. 2 min / 12 min

9 V emergency battery

The 9 V battery allows the bed to return to the sleeping position at any time, independently of the mains power supply.

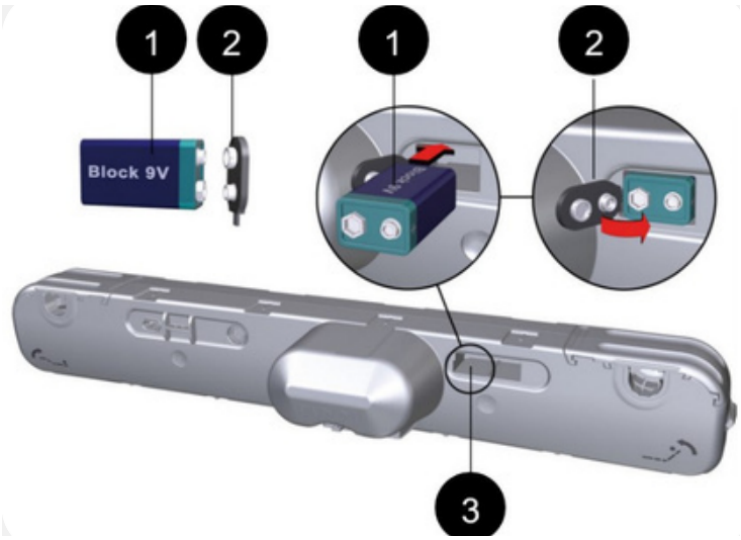

Emergency battery connection: 1 - 9 V battery; 2 - battery clip; 3 - battery compartment.

9. Installation and assembly

Check that the product is complete and free from visible transport damage. Dispose of packaging through the appropriate recycling collection point. The bed is normally supplied assembled; the castors, lift motor and mattress support brackets still require fitting.

9.1 Fit the castors

- Tighten the screws using a No. 10 Allen key. The key is not supplied.
- Fit the two braked castors diagonally: one at the head end and one at the foot end.

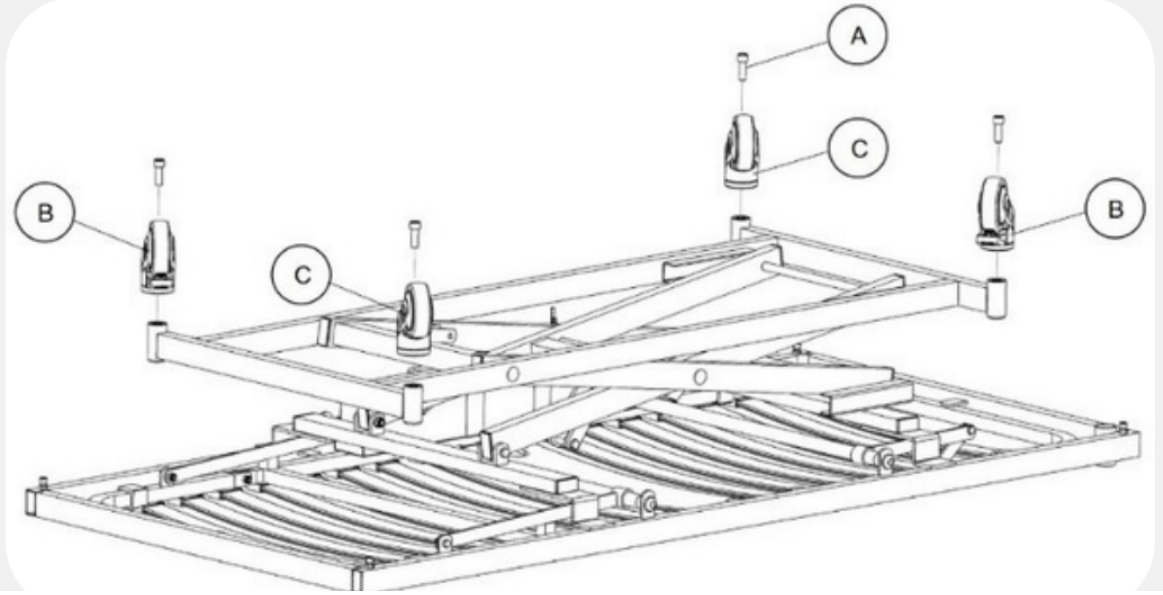

Castor assembly positions. A - 4 x M12x35 hex-socket screws; B - 2 x braked castors; C - 2 x unbraked castors.

10. Lift motor installation

- Tighten the fasteners using a No. 17 spanner. The spanner is not supplied.

IMPORTANT	Before fitting the motor to the trolley, identify the head end and the foot end so the motor is positioned correctly.

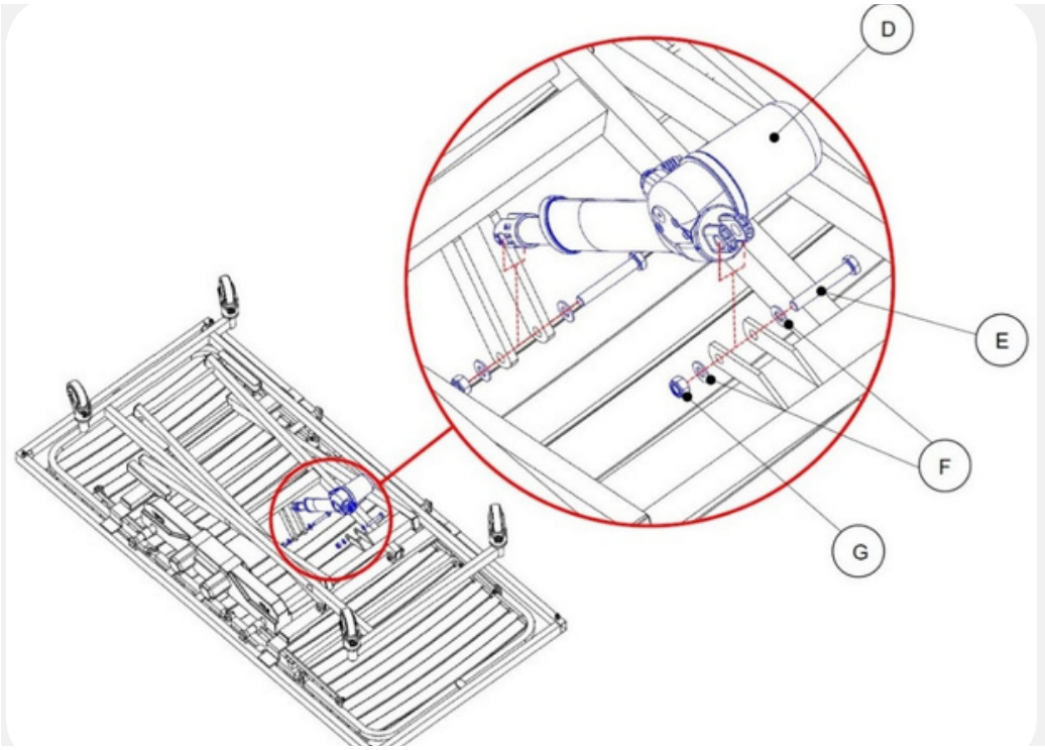

Lift motor assembly. D - 1 x lift motor; E - 2 x M10x65 zinc-plated hex bolts; F - 4 x M10 flat washers; G - 2 x M10 steel lock nuts.

11. Headboards and mattress support brackets

11.1 Headboard / footboard example - model 10.AC.1089

- Tighten the screws using a No. 16 spanner. The spanner is not supplied.

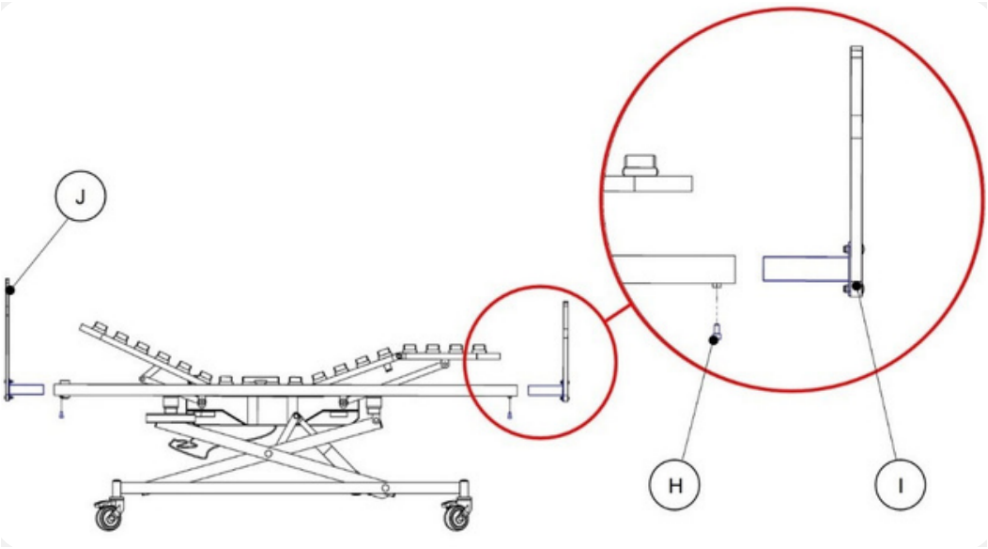

Headboard and footboard mounting example. H - 4 x M8x16 hex-socket screws; I - 1 x footboard; J - 1 x headboard.

Headboards and footboards are supplied separately. Several models are available; contact the distributor to select a compatible model.

11.2 Mattress support brackets



Fit the four clip-on mattress support brackets (K) in the positions shown.

CAUTION	Do not position the mattress support brackets over the articulations. Incorrect placement can interfere with bed movement and damage the equipment.

12. Installation and commissioning

12.1 Before connecting the bed

- If the transport or storage temperature differs from the recommended operating temperature, leave the bed disconnected from the mains for 24 hours so it can adapt to the ambient temperature.
- Connect the bed to the mains power supply.
- Test each articulated bed-platform section by raising and lowering it through its full movement range.
- Check every handset function.

12.2 Handset and electrical components

The handset and electrical components are factory-installed and do not require assembly. Before first use, check that all components are correctly connected.

WARRANTY	Electrical components are factory-sealed for safety. Opening or tampering with these components damages the seals. The manufacturer does not provide warranty cover for items with damaged seals.

13. Handset operation

LEFT COLUMN - RAISE



RIGHT COLUMN - LOWER

1. Raise backrest section

2. Raise foot section

3. Raise backrest and foot sections simultaneously

4. Raise bed platform

1. Lower backrest section

2. Lower foot section

3. Lower backrest and foot sections simultaneously

4. Lower bed platform

WARNING Before a patient uses the handset, provide all instructions necessary for its operation. Do not leave the handset within reach of the patient or other people if the medical team determines that the patient’s clinical condition does not permit its use.

14. Maintenance

Because some parts are subject to wear from use, cleaning and disinfection, inspect the following at least once every three months:

- Screws.
- Articulations and screws of the bed-platform sections and motor; clean and lubricate them with silicone oil.

Any other special maintenance procedure requires qualified personnel or the manufacturer.

In addition, carry out at least one inspection per year to check wear on moving and articulated parts.

WARNING	If any abnormality is found during cleaning or maintenance, do not put the bed into operation. Contact the supplier.

Accessories and replacement parts

- Use only original manufacturer accessories and mattresses to avoid failures.
- Replace bed components only with manufacturer approval.
- Maintenance and installation must be performed by qualified professionals.
- During repairs, use materials and components supplied by the manufacturer.

15. Cleaning and disinfection

Use detergents suitable for cleaning medical devices. If in doubt, consult the manufacturer.

> **WARNING** Disconnect the bed from the mains power supply before any cleaning operation.

- Do not use abrasive detergents or other materials that may damage the coating.
- Do not use corrosive, caustic or acidic products, or detergents that can alter the structure or behaviour of plastics, including thinner, acetone or petroleum-based products.
- Clean the bed with a soft, damp cloth.
- The bed is not designed for automatic washing stations, high-pressure water, spraying or steam cleaning.

Cleaning procedure

- Raise the bed platform to its highest position and fully articulate the backrest and foot sections for access.
- Lock the castors. Block articulation movements on the supervisor control and disconnect the hand control to prevent accidental movement during cleaning.
- Disconnect the mains cable.
- Set the level of cleaning and disinfection according to the purpose and contamination level of the bed.

Motors and hand controls

Clean their smooth surfaces with a soft, damp cloth. Never use automatic washing stations, tunnel washing, high-pressure water or liquid sprays on motors or controls. Do not use solvents such as benzene, alcohol or similar substances.

16. Storage, packaging and recycling

Storage and packaging

- The bed is supplied in a cardboard box unless the customer requests another type of packaging.
- Do not store the bed in damp locations.
- Protect it from falling objects.
- Do not stack it. Preferably store it in the horizontal position.
- Do not place weights on the packaging, as this may damage components.

Environmental protection

- Separate packaging waste and send it to the appropriate recycling collection points or licensed operators.
- At the end of the product's service life, deliver it to a licensed operator.
- Do not dispose of the product with household waste.

Electrical components at end of life must be sent to licensed operators. Disposal and recycling must be carried out in accordance with Decree-Law No. 152-D/2017 of 11 December.

CE Declaration of Conformity

To obtain the CE Declaration of Conformity, contact the manufacturer:
JMS - Indústria de Mobiliário Hospitalar, S.A.
Rua Zona Industrial do Bunheiro, 26, 3870-021 Murtosa - Portugal
T: (+351) 234 880 018 | E: jms@jmshospitalar.com

IMPORTANT	JMS does not accept responsibility for damage caused by accessories not previously tested and not manufactured by JMS, or for damage caused by misuse, disregard of the instructions or negligence in use and handling.